This document contains proprietary information and may not be reproduced or copied without the express written permission of a duly authorised representative of RFCM

REV	DESCRIPTION	DSG	APR	DATE

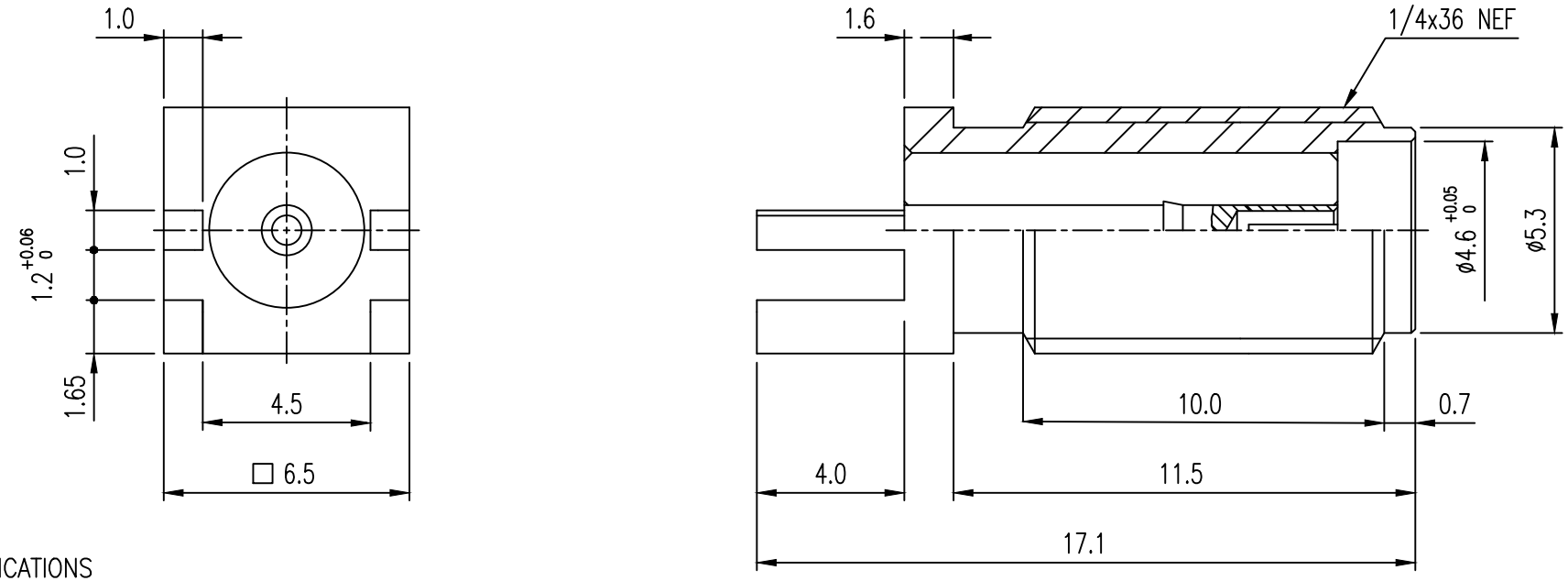

ELECTRICAL SPECIFICATIONS

1 IMPEDANCE : 50 Ohms
2 FREQUENCY RANGE : DC~18GHz
3 V.S.W.R : 1.35 max @ 18GHz
4 Operating Voltage (AC) : 500 Vrms
5 Dielectric Withstanding Voltage (AC) : 1000 Vrms
6 Insulation resistance : 5000MΩ min

MECHANICAL SPECIFICATIONS

1 Connector Life : 500 matings.
2 Connector Body : Brass or stainless steel & Gold plating
3 Female Centor Pin : Beryllium copper & Gold plating
4 Insulators : PTFE Teflon

ENVIRONMENTAL SPECIFICATIONS

1 Operating Temperature : −65℃ to +140℃
2 Corrosion resistance : MIL−STD−202,Method 101,Condition B,5% Salt Solution
3 Moisture resistance : MIL−STD−202,Method 106
4 Thermal shock : MIL−STD−202,Method 107,Condition B,+145℃ High Temp
5 Random Vibration : MIL−STD−202,Method 204,Condition D
6 Mechanical shock : MIL−STD−202,Method 213,Condition I
7 RoHS :Compliant

UNLESS OTHERWISE SPECIFIED :
ALL DIMS IN MILLIMETERS
TOLERANCES ON DECIMALS
1 PLACE ±0.20 AGGLE ±1.0° 1.6a
2 PLACE ±0.10
REMOVE BURRS. BREAK SHARP EDGES

THIRD ANGLE

DRAW	DESIGN	CHECK	APPRO.
mk_HONG			
2019.8.25			

Material: C3604BD
Finish: 0.3 Min

RFCM

TITLE: SMA Female Bulkhead 4R PCB 1.2T SMA Female End Launch 1.2T

SIZE: A4 | DWG NO.: A | REV: A

Scale : NS | Do Not Scale Drawing | 1 of 1

면적 (AREA) : 552.54
질량 (MASS) : 190.64 [CAD상의 질량]